ECOGEN TECHNOLOGY
Room 216, 6 Aerodromnaya street, Saint Petersburg, 197348 Russia;
Tel.: +7 (812) 339-8995; Fax: +7 (812) 394-1267; E-mail: info@ecogentech.ru www.ecogenthermoelectric.com

SPECIFICATION OF THERMOELECTRIC MODULE TB-195-1.0-0.8

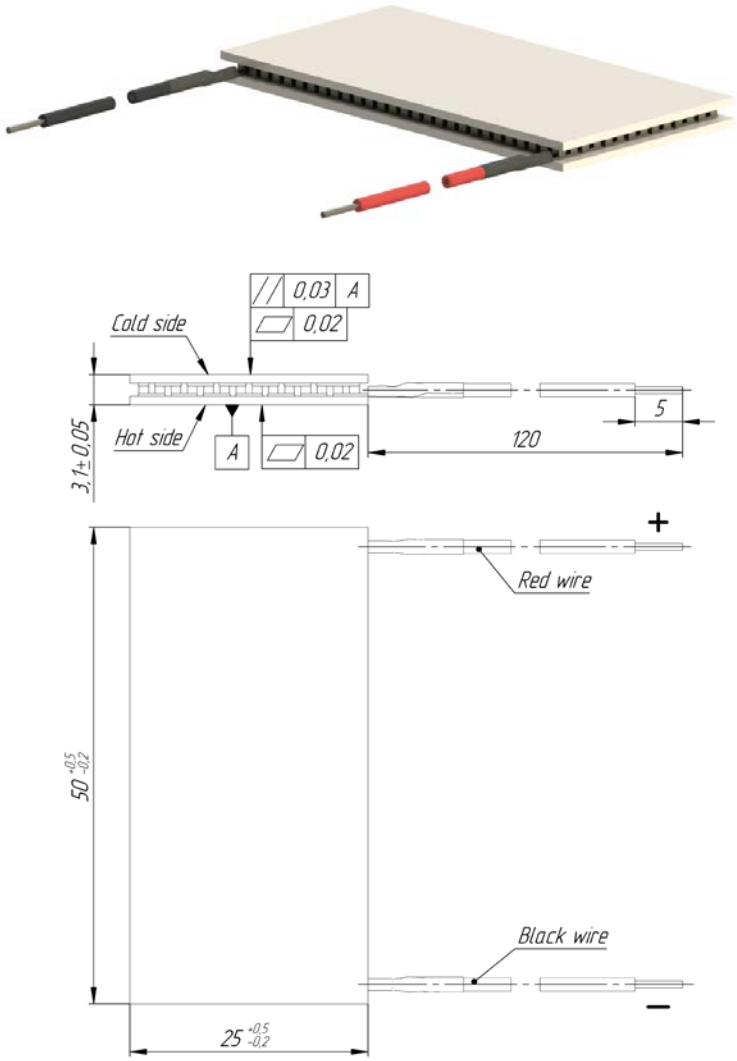

Thermoelectric parameters	*Unit*	*Value*
Imax	**A**	**5.8**
Umax	**V**	**24.1**
ΔTmax ≥	**K**	**68**
Qmax ≥	**W**	**86**
R_{ac} *(at 295 K)*	**Ohm**	**3.2**
Tolerance R_{ac}	**%**	**±10**
All parameters except R_{ac} are given at Th=300 K		

Assembly parameters	*Unit*	*Value*
Wires	**HB-0.35 4 600**	
Cross section	**mm^2**	**0.35**
Metallization	**-**	
Sealing	**-**	
Internal solder	**°C**	**139**

Operational parameters	*Unit*	*Value*
Working temperature range	**°C**	**-50 ÷ +80**
Max. processing temperature	**°C**	**130**
ROHS compliance		**Yes**

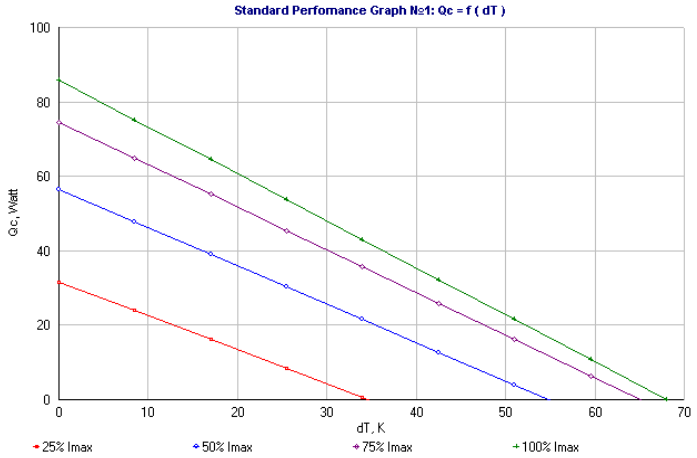

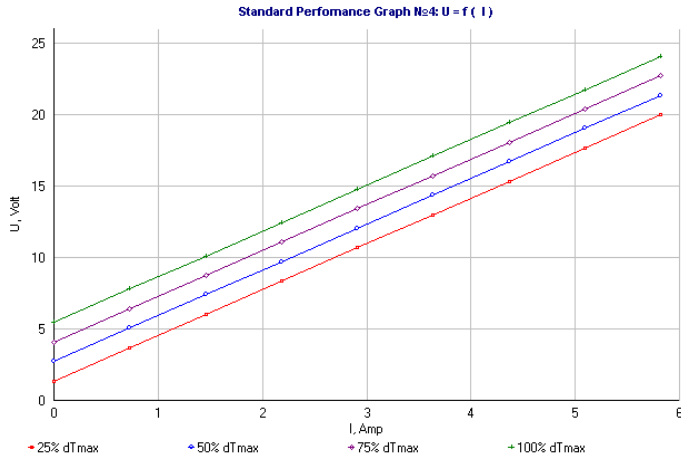

Ecogen

Customer